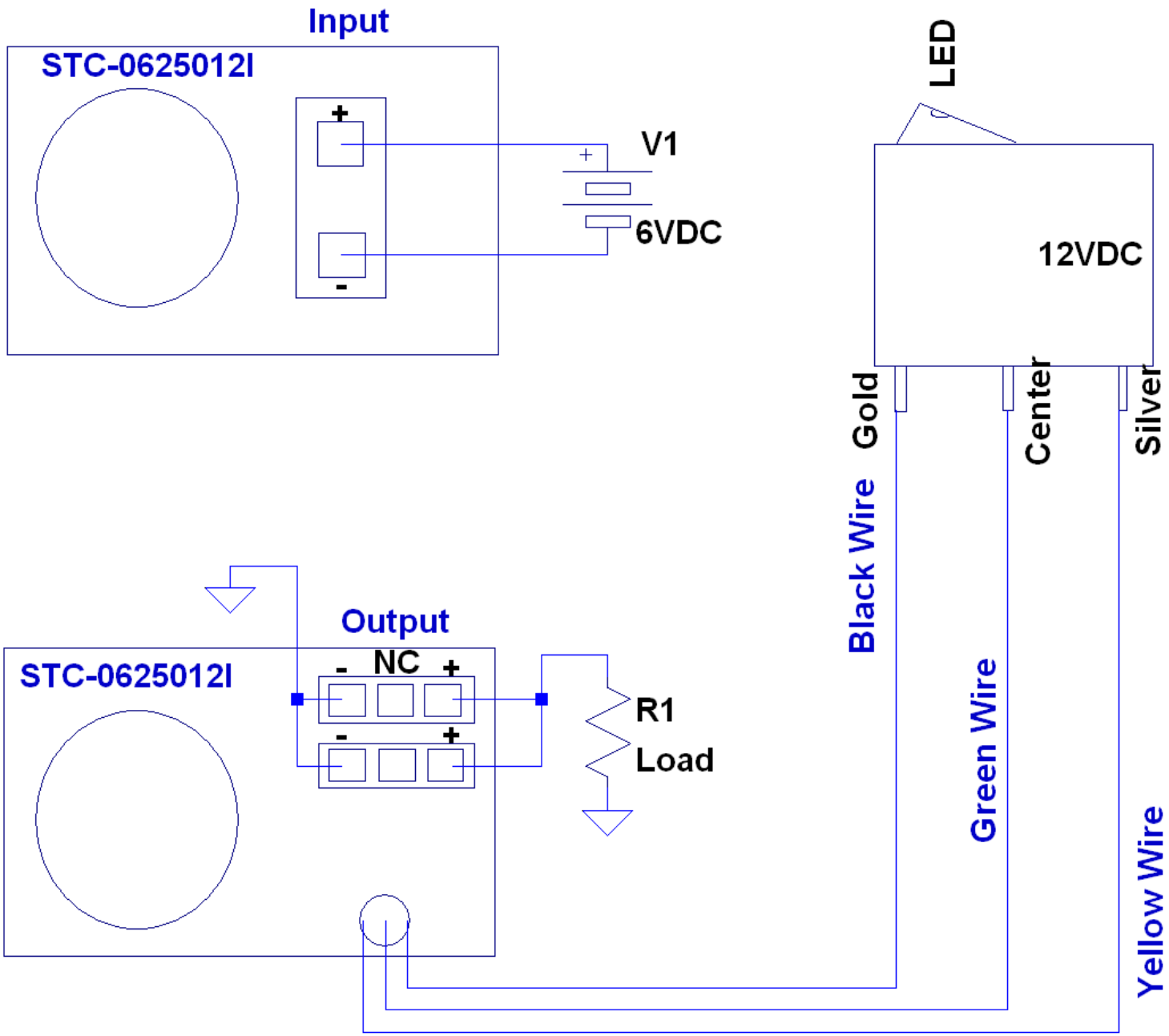
Input
STC-0625012I
+
-
V1
6VDC
LED
12VDC
Gold
Center
Silver
Black Wire
Green Wire
Yellow Wire
Output
STC-0625012I
NC
-
+
-
+
R1
Load